Toward International UV Germicidal Air Disinfection Guidelines

Shelly L. Miller University of Colorado

On behalf of Richard Vincent, Ed Nardell, and Paul Jensen

Outline

- Purpose
- Dosing Strategies
  - UV Watts/Room Volume (practical approach)
  - CAD (rigorous approach, for designing)
- What UV Data is needed from Commercially Available Luminaires/Fixtures
  - UV luminaire emissions (direction, volume, total output, efficiency)
- UV Safety Measurements with 80° FOV
- Development of International Guidelines

What are the barriers to wider, more effective, and safe use of UVGI and how can they be overcome?

1. Safety
2. Efficacy
3. Guidelines

   dosing

   maintenance

   safety
4. Fixture efficiency
5. Logistical issues

Airborne Infection control: Consider When and Where to Apply Upper Room UVGI

Room-scale studies:
Riley-Middlebrook, 1976 - aerosolized BCG

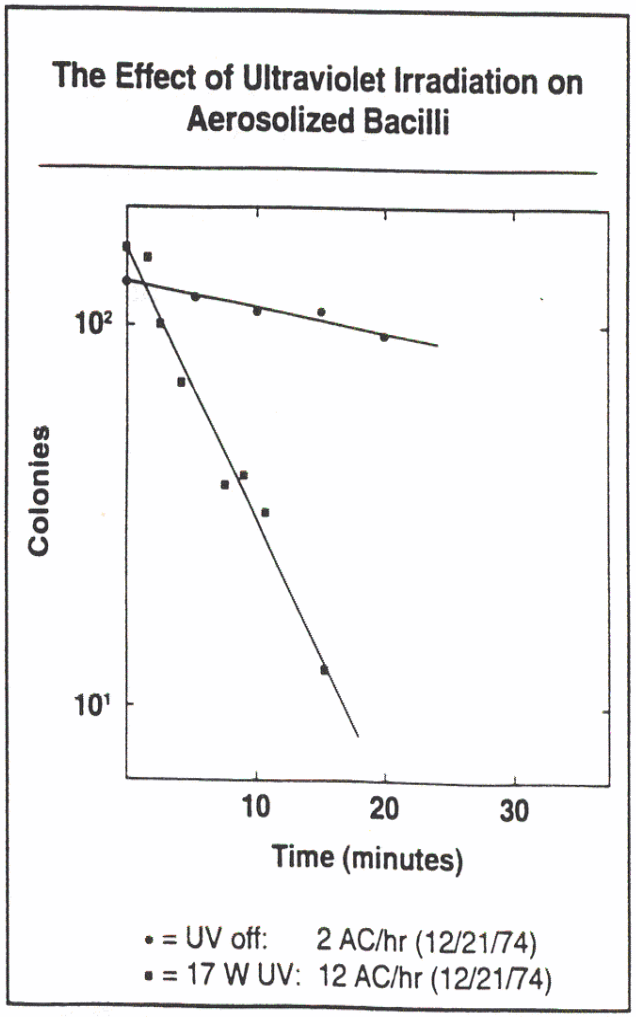

- A single 17 W UV lamp added the equivalent of 10 air changes to an unventilated room – air mixing by radiator only
- Established current dosage guideline 30 W fixture per 200 sq ft area.
  - Am Rev Resp Dis, 1976, 113:413-18.
- Did not characterize UVGI fixture output
- Mixing probably good, but not measured.

Environmental Control for Tuberculosis:

Basic Upper-Room Ultraviolet Germicidal Irradiation Guidelines for Healthcare Settings

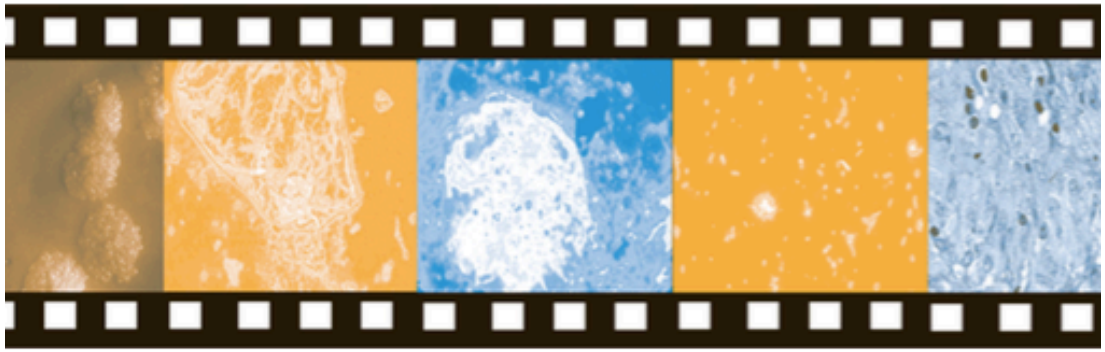

Department of Health and Human Services
Centers for Disease Control and Prevention
National Institute for Occupational Safety and Health

Factors influencing effectiveness

UVGI Irradiance and dose

Design to provide an average UV fluence rate in the upper room in the range of 30 μW/cm^2 to 50 μW/cm^2

Chemical actinometry (Rahn et al., 1999)

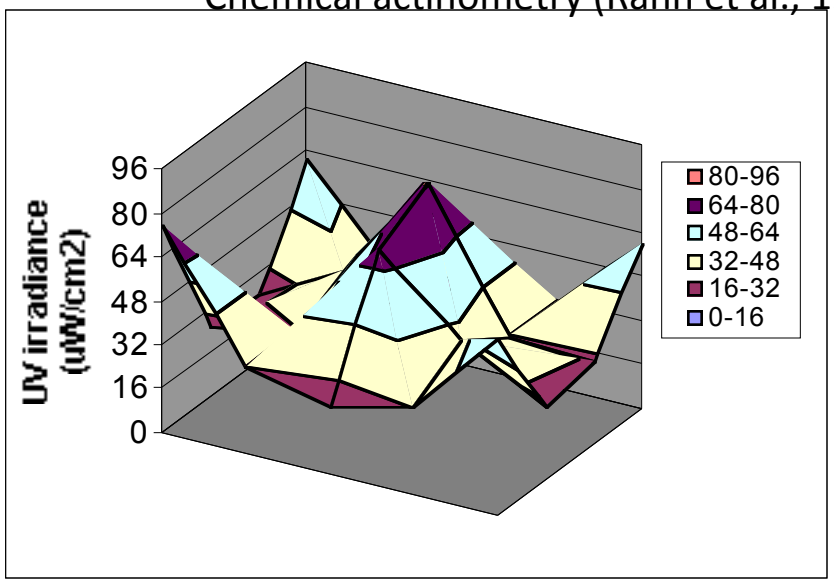

Average: 43 μW cm^{-2}
Maximum: 87 μW cm^{-2}
Minimum 23 μW cm^{-2}

Factors influencing effectiveness

UVGI Irradiance and dose

Ensure a uniform UVGI distribution in the upper room

Unevenly distributed UV radiation results in 30% lower inactivation rates (Xu et al., 2005)

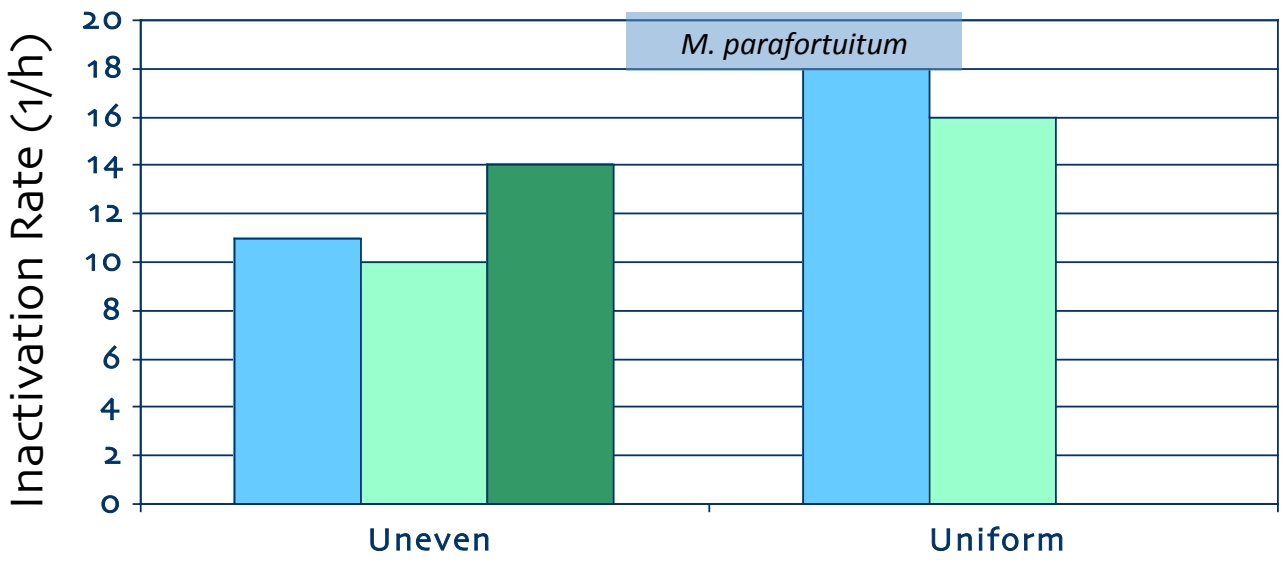

Peru Studies: Upper room UV light for the prevention of airborne tuberculosis transmission

R Escombe, R Ramirez, RH Gilman, M Navincopa, E Ticona, P Sheen, C Noakes, B Mitchell, D Moore, JS Friedland[1], C Evans

(PLoS Medicine | www.plosmedicine.org 0312 March 2009 | Volume 6 | Issue 3 | e1000043)

Guinea Pig study

UVGI reduced TB: 72% (about 80% corrected for multiple hits)

Ionisers reduced TB: 58%

Not entirely characterized – did not use the results to propose guidelines

Imperial College London

PRISMA

wellcome trust

Universidad Peruana Cayetano Heredia

Figure 6. Kaplan-Meier Time-to-Event Curves

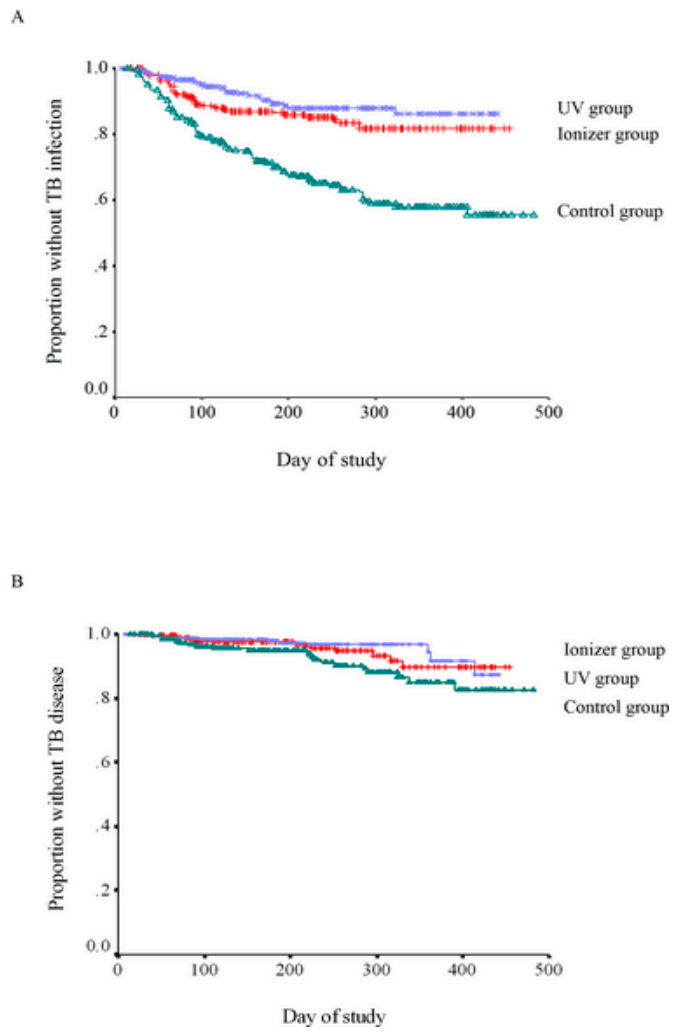

Escombe AR, Moore DAJ, Gilman RH, Navincopa M, Ticona E, et al. (2009) Upper-Room Ultraviolet Light and Negative Air Ionization to Prevent Tuberculosis Transmission. PLoS Med 6(3): e1000043. doi:10.1371/journal.pmed.1000043
http://127.0.0.1:8081/plosmedicine/article?id=info:doi/10.1371/journal.pmed.1000043

Institutional Tuberculosis Transmission: Controlled Trial of Upper Room Ultraviolet Air Disinfection A Basis for New Dosing Guidelines

Matsie Mphahlele , Ashwin S. Dharmadhikari , Paul A. Jensen, Stephen N. Rudnick,Tobias H. van Reenen, Marcello A. Pagano, Wilhelm Leuschner, Tim A. Sears, Sonya P. Milonova, Martie van der Walt, Anton C. Stoltz, and Edward A. Nardell

AJRCCM Articles in Press. Published on 30-April-2015 as 10.1164/rccm.201501-0060OC

Key Findings

- Upper room UV germicidal air disinfection with air mixing was highly effective (80%) in reducing tuberculosis transmission under hospital conditions.
- Data support using
  - Practical (Volumetric) approach of a total luminaire/ fixture output (rather than electrical or UV lamp wattage) of

    15-20 mW/m^3 total room volume, or
  - CAD approach to calculate an average whole room UV irradiance (fluence rate) of 5-7 µW/cm2, using a lighting, CAD program modified for UV use.

UVGI Dosing Criteria:

Riley study	**30 W (nominal)** **Per 200 sq ft floor area**	Does not take lamp or **fixture efficiency** into account
NIO (pri	[redacted]	[redacted]
NIOSH study	**6.3 W total UVGI <u>lamp</u> wattage** per cubic meter **upper** room volume	Does not take **<u>fixture</u> efficiency** into account
A Af (primary)	[redacted]	(incorporates ray length)
AIR Facility South Africa study (practical)	**17 mW total fixture UV output/m³ room volume**	Requires **Total Fixture UV Output** measurement (supplied by manufacturer) Must adjust for **avg ray length** in a given room

15 mW total fixture UV output/m³ room volume

5 - 7 µW/cm² avg. UV fluence rate (for the entire room)

Fundamental Factors Affecting Upper-Room Ultraviolet Germicidal Irradiation—Part II. Predicting Effectiveness

Stephen N. Rudnick and Melvin W. First
Harvard School of Public Health, Boston, Massachusetts
Journal of Occupational and Environmental Hygiene, 2007; 4: 352–362 ISSN: 1545-9624 print

1. **UVGI Fluence rate for the <u>entire room volume</u>**
   (assumes good air mixing)

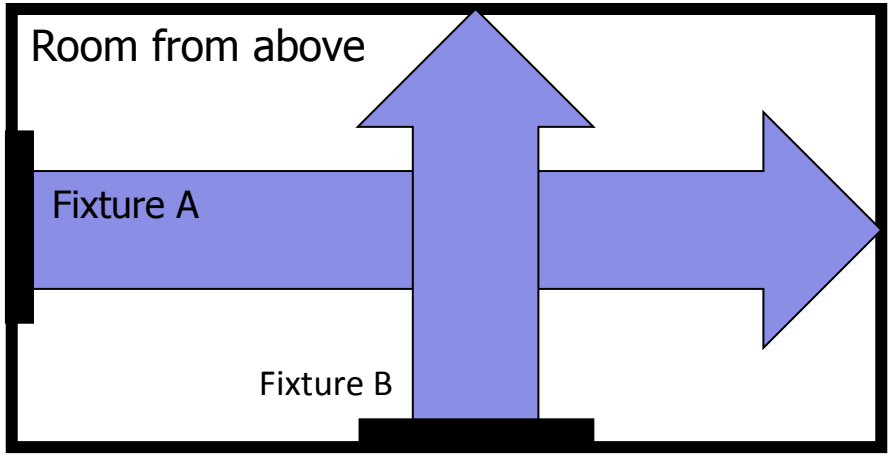

2. Mean UV ray length – effective until it is absorbed by a wall or ceiling.

3. Room vertical air mixing – assumed to be "good" with the use of low-velocity paddle fans – direction and velocity do not appear to be critical.

Fixture Output:

- For any rational room dosing formula fixture output must be known
- Manufacturers should provide this data for every fixture model – performed by a qualified lighting lab:
  - Full gonioradiometry for Visual-UV input
  - Total fixture output by Integrating sphere
  - Total fixture output by Rudnick method
    - for some fixtures

Upper-Room UVGI Luminaires

- Open UVGI for High (>9 ft) Ceilings (>2.7 m)
- Louvered UVGI for Low (8-9 ft) Ceilings (2.4-2.7 m)

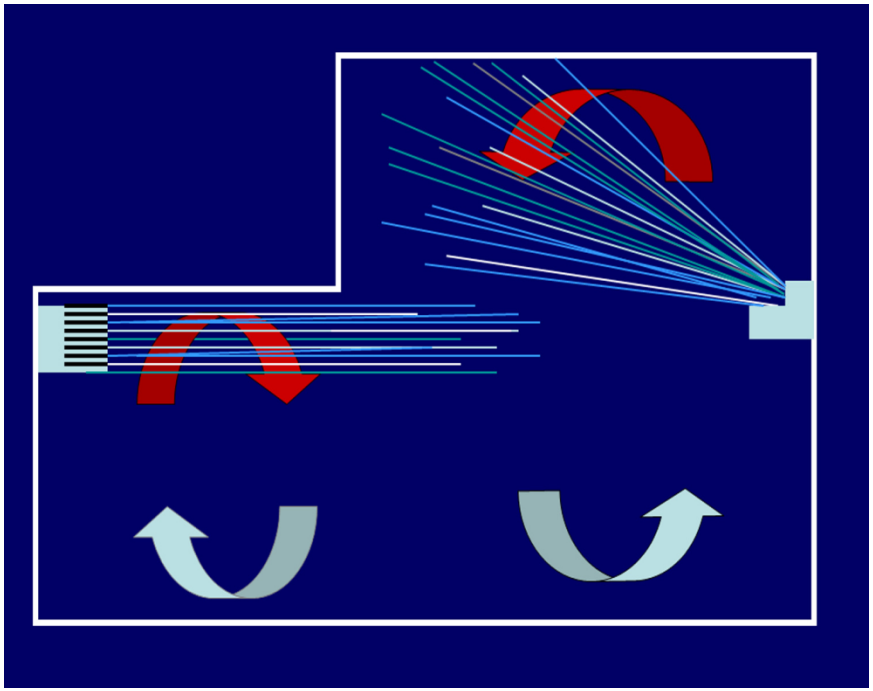

Source: Martin S et al. ASHRAE Journal Aug 2008 p 34

Research to provide safer products

(Riley and Nardell)

Louvered luminaire designs a response to low ceilings in modern buildings

- To reduce direct downward UV exposure of room occupants
- To reduce reflectance from ceilings to room occupants
- Design shared with a number of manufacturers who have innovated on their approaches

Current Louvered UVGI Fixtures

- Fixture efficiency varies dramatically
  - Approximately 1/3 of electrical input converted into UV
  - Louvers designed to limit irradiance in the lower room absorb much of the UV output
  - Previously not taken into consideration for dosing purposes

Fixtures used in the AIR Facility experiments

	Total Electrical Input (measured)	UV Input	UV Output from Fixture	UV Efficiency (UV Output/UV Input)	Total Efficiency (UV Output/Total Input)
Model A	110 W	36.7 W	0.22 W	0.6%	0.2%
Model B	25.6 W	8.53 W	0.49 W	5.7%	1.9%

METHODS FOR MEASURING FIXTURE'S UV EMISSION RATE

- Calibrated Integrating Sphere (input to Room Volume Approach)
- UV Sensor Traverse – New (input to Room Volume Approach
- Gonioradiometry (input to CAD-UV tool and can provide emission rate of Sphere and Traverse methods)

A CALIBRATED INTEGRATING SPHERE

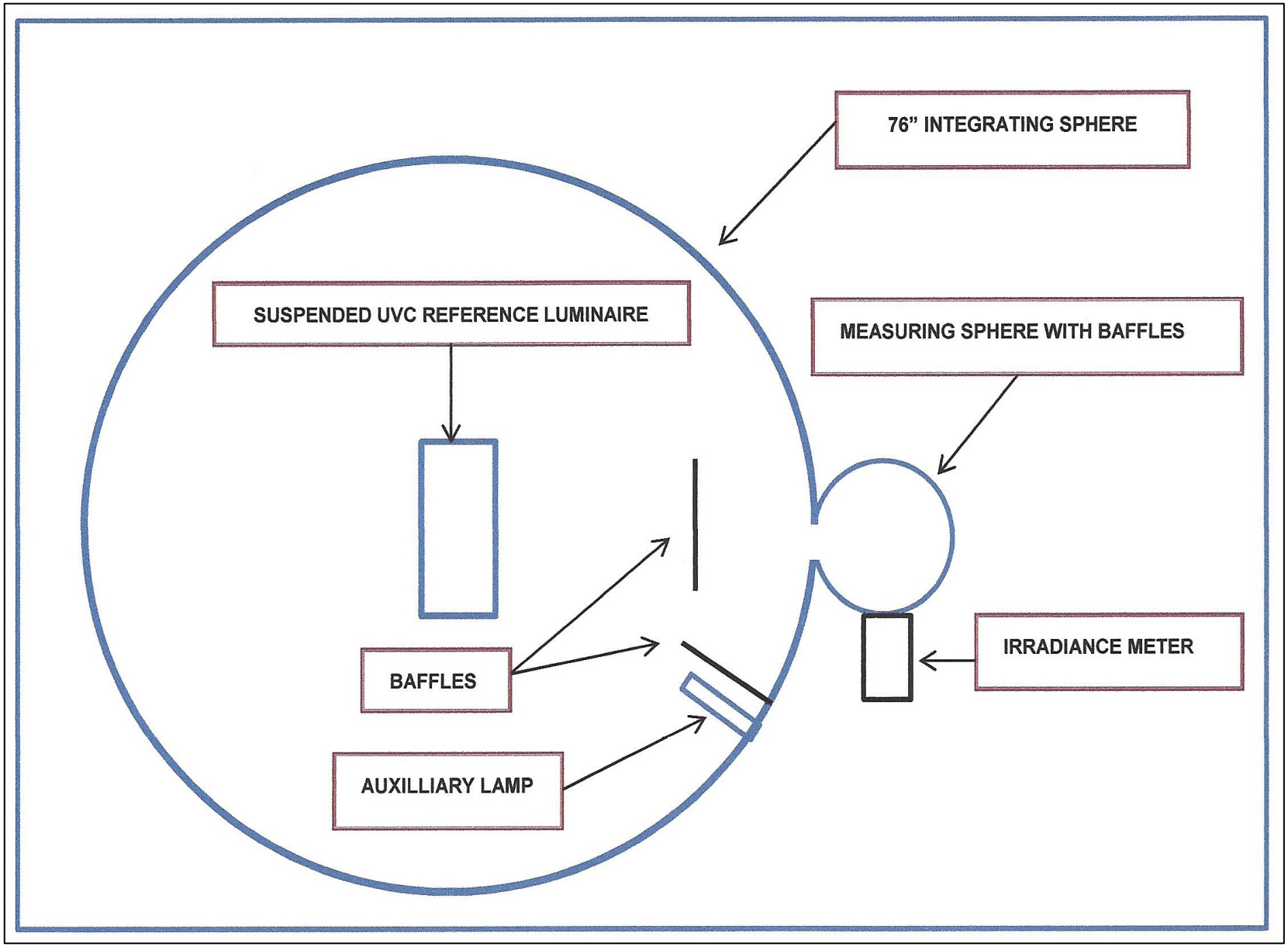

FACE OF COMMERCIAL UV FIXTURE

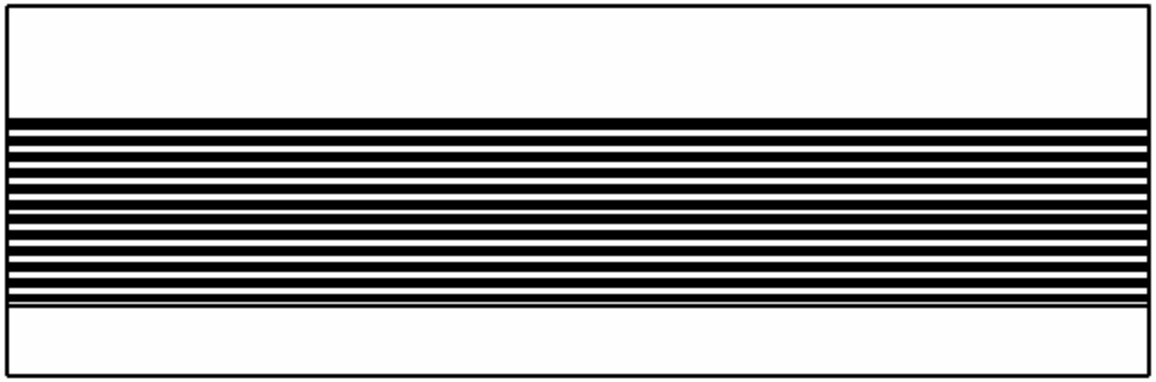

Face of louvers

UV SENSOR TRAVERSE METHOD

S.N. Rudnick, ScD, Harvard School of Public Health

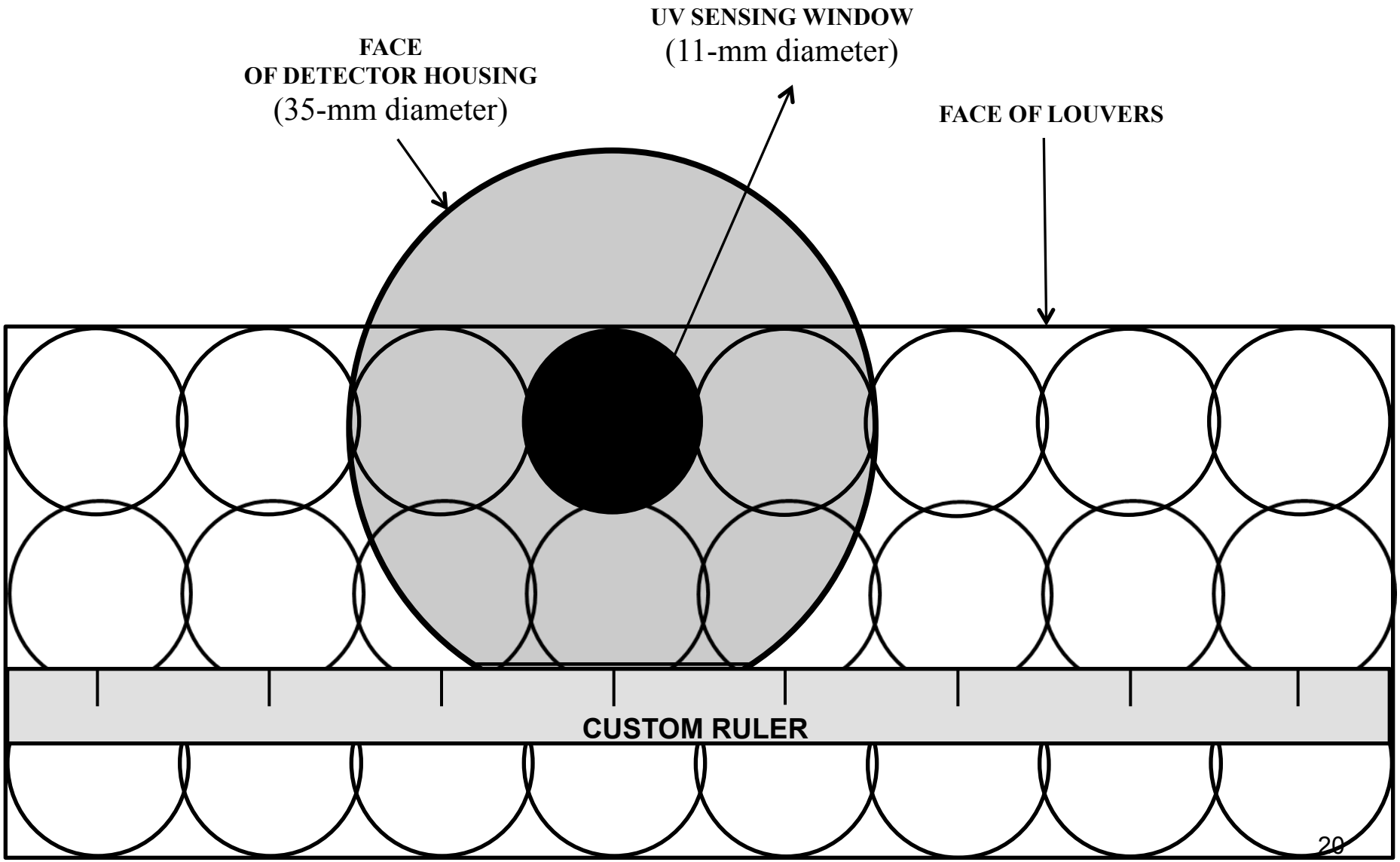

Example: practical method

Vol: 150 m^3
17 mW/m^3 = 2.5 W needed
0.5 W output/fixture A = 5 fixtures
0.2 W output/fixture B = 12 fixtures

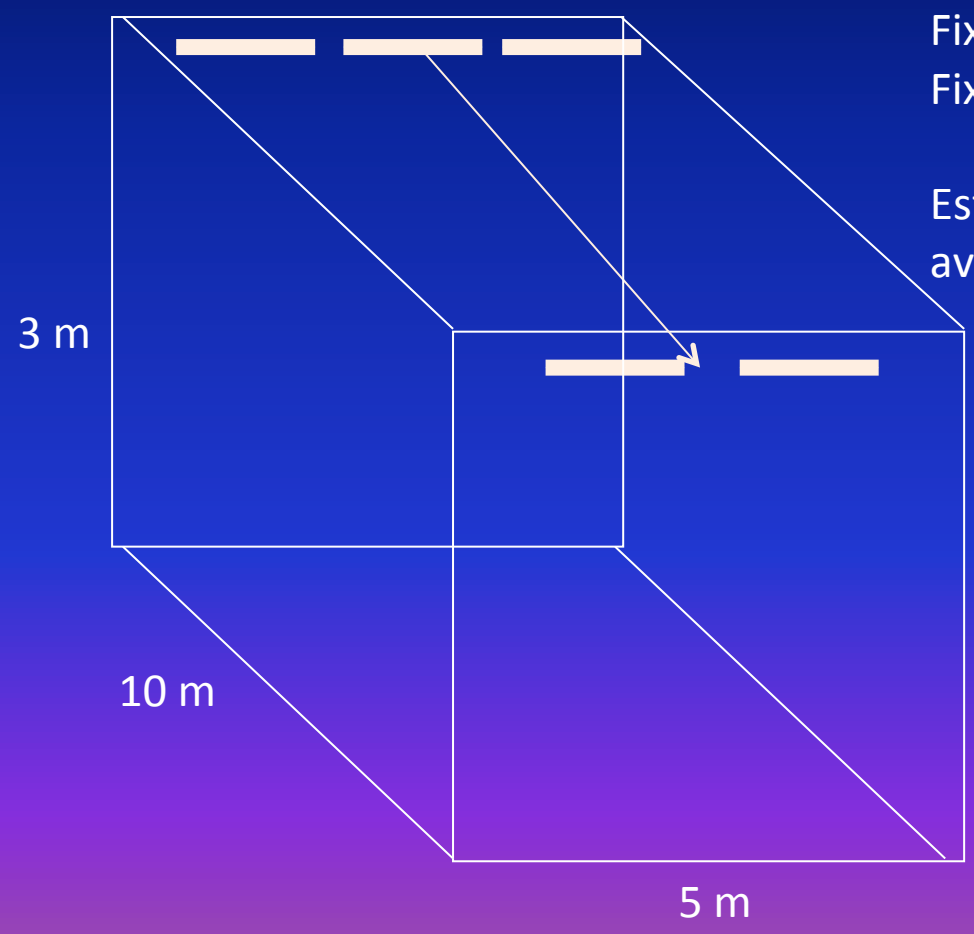

Required:
Total UV output of fixtures
1. Integrating sphere
2. Rudnick direct method

Fixture A = 0.49 W
Fixture B = 0.22 W

Estimate location for maximum average ray length

Gonioradiometry of UVGI fixture

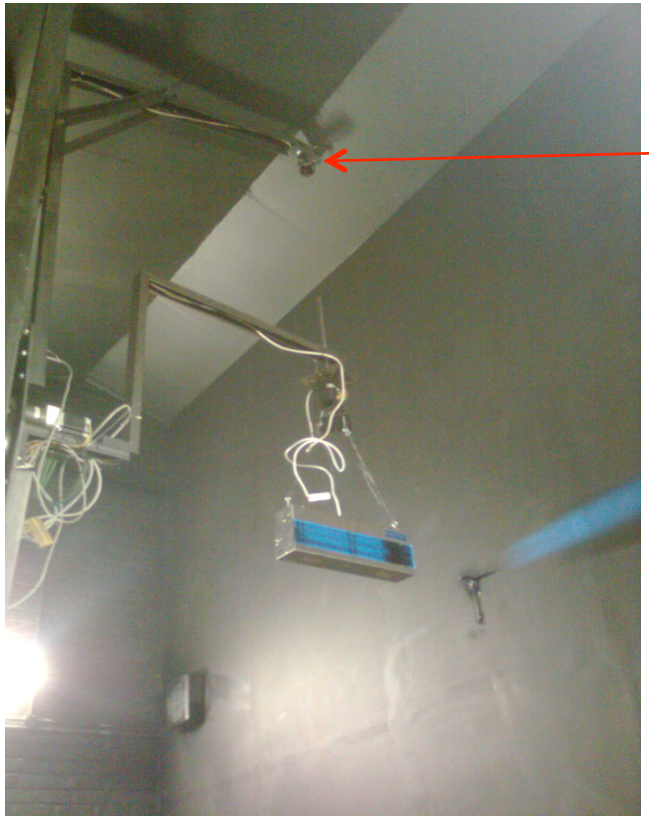

Sensor at zero degrees

- **UVc detector at 2.5m**
- **Protocol by Zhang et al – 65 vertical angles, and 23 horizontal angles**
- **0.0174 error**

CSIR
our future through science

Example: CAD method

1. Estimate using practical method: 5 fixtures
2. Enter room and fixtures into Visual-UV
3. Target: 5 – 7 uW/m^3 avg room UV fluence rate

Advantage: incorporates ray length

Visual calculated value: 8.3 uW/cm^2

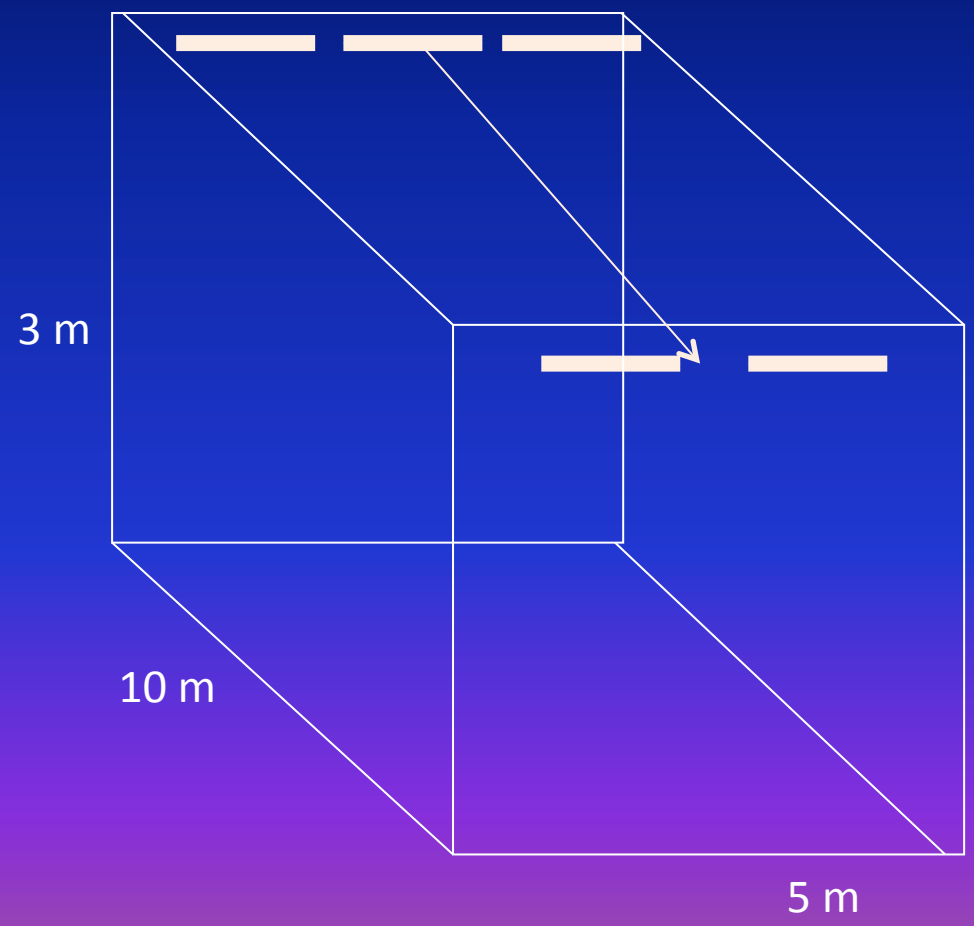

Required:
full gonioradiometry
of fixtures

For further information on CAD Contact:
Richard.Vincent@mountsinai.org

Outpatient Department (OPD)

OPD UVGI Luminaire Layout Using Visual CAD Tool

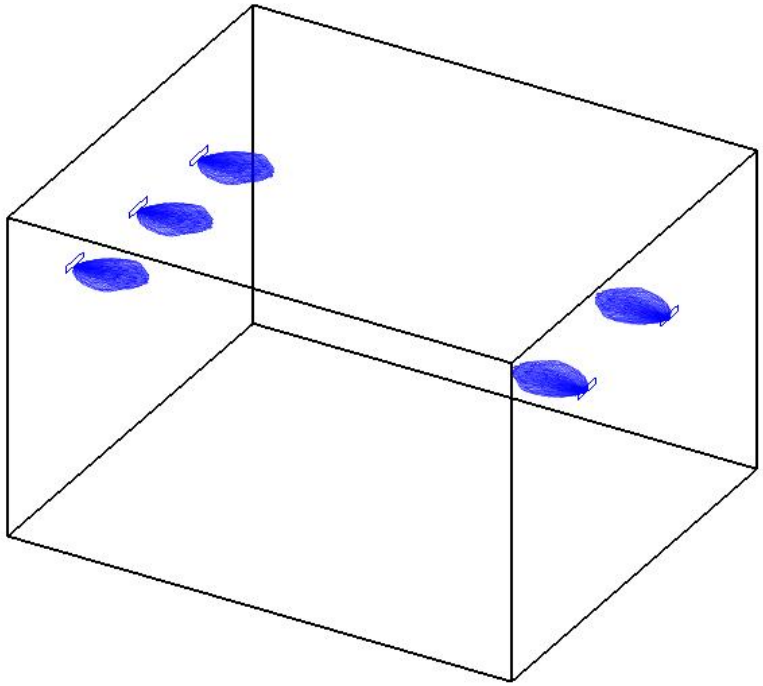

Room	L (m)	W (m)	H (m)	V (m^3)	UV W	# Luminaires Louvered UV W, Use: 0.5 W (Current Best Practice)	# Luminaires Louvered UV W, Use: 1.0 W (Possible)
OPD (India)	6. 28	5.3	3.97	132.14	2.25	4.49 (use 5)	2.25 (use 3)

Fluence Cloud and Eye Level Irradiance Calculated by Visual

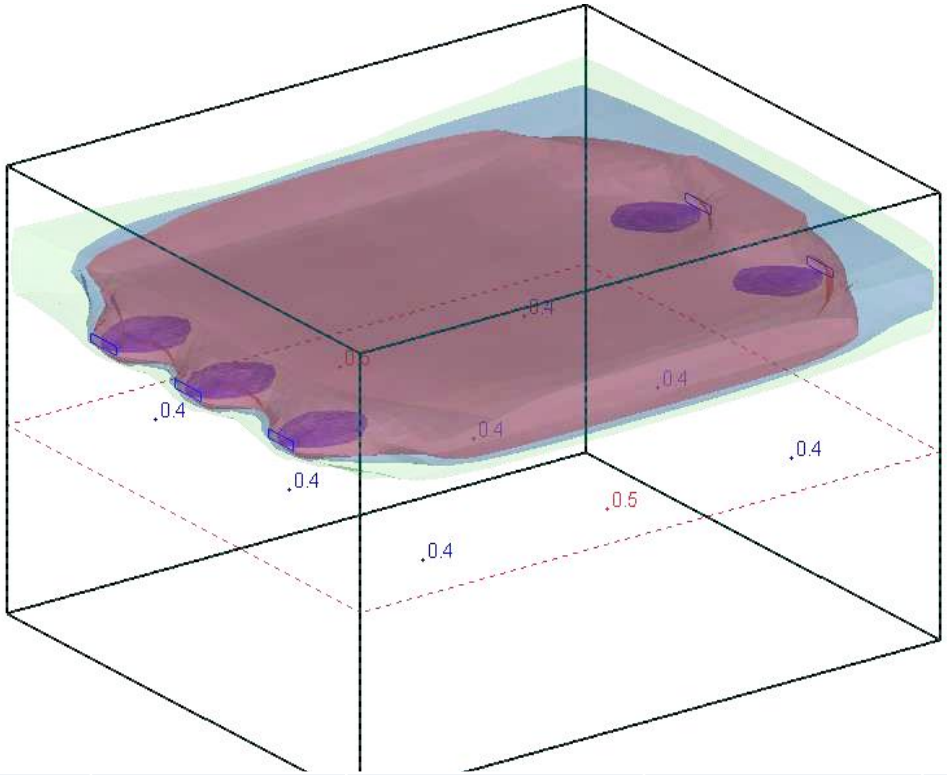

Statistics				
Description	**Avg**	**Max**	**Min**	
Calc Zone #1 Eye Level Irradiance	**0.4 µW/cm²**	**0.5 µW/cm²**	**0.4 µW/cm²**	
Fluence Rate Zone 1	**Ave Fluence**	**33 µW/cm²**	**upper room**	**Ave 12 µW/cm² Entire Room**

80º Field of View (FOV) Tube To Assess UVGI Safety in Occupied Rooms

Gigahertz tube (top) and handmade tube

Threshold Limit Value

The ACGIH established a threshold limit value (TLV) as a guideline for avoiding skin and eye injuries.

For 254 nm, the dose limit is 6.0 mJ/cm^2

“The sources may subtend an angle less than 80 degrees at the detector and for those sources that subtend a greater angle need to be measured over an angle of 80 degrees.”

80º Field of View (FOV) Tube

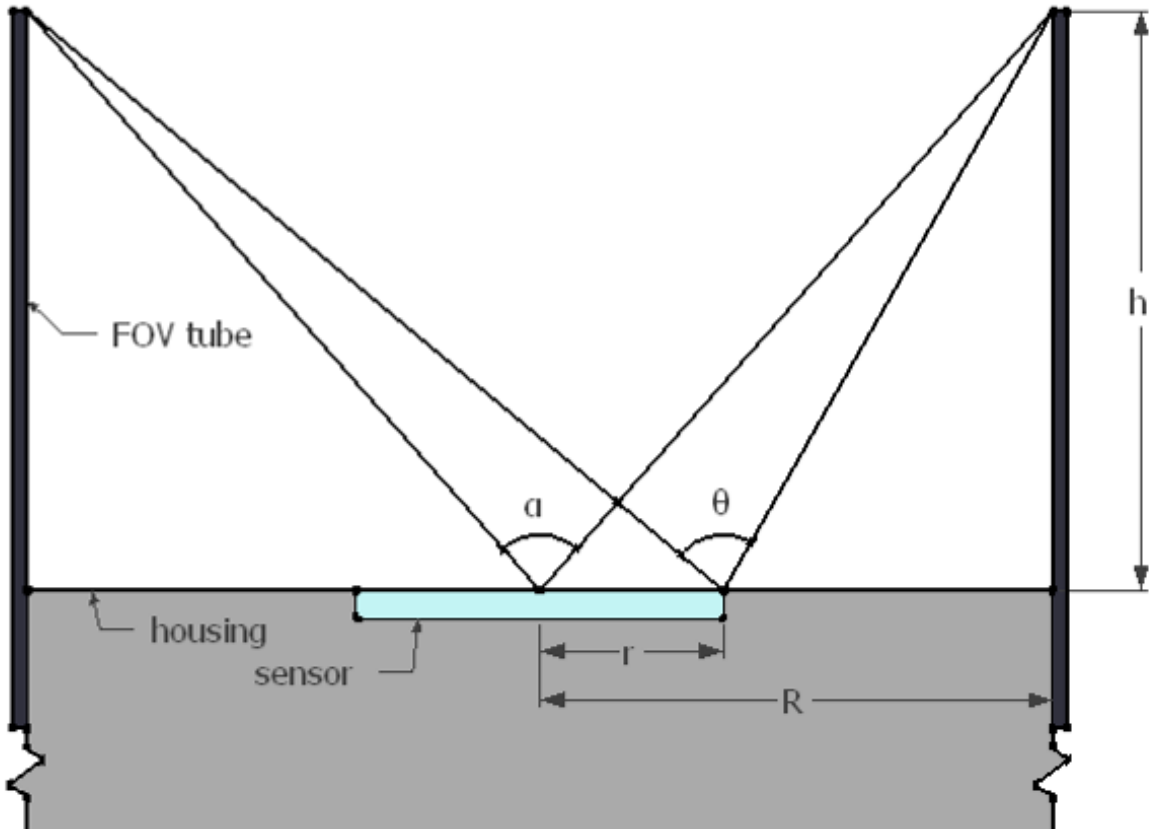

r = radius of the sensor

R = radius of the housing

h = height of the tube

= exposure angle from the perimeter of the sensor

= exposure angle from the center of the sensor

Section of sensor with FOV tube

FOV Study Conclusions

Measuring lower room irradiance with a bare sensor overestimates UV exposure to lower room occupants.

More UV radiation could be allowed in the lower and upper room, increasing efficiency of upper-room UVGI fixtures, without compromising the safety of occupants in the lower room.

A standard for measuring lower room irradiance should be published. The standard should specify that an 80º FOV tube be used, and its design should be clarified.

FOV tube 1 restricts more rays from reaching the sensor than the handmade FOV tube 2 and does not strictly comply with the TLV guideline.

Guidelines Under Development

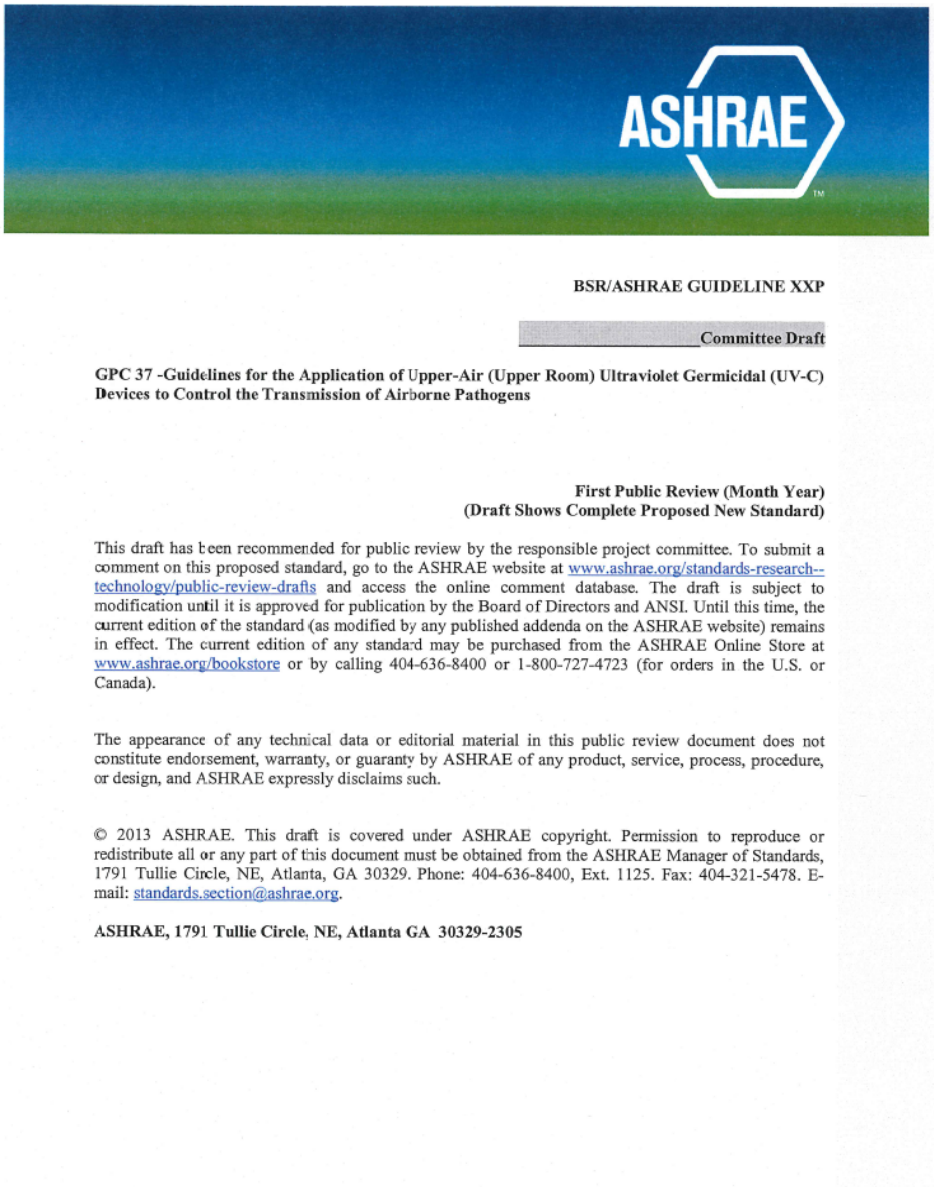

BSR/ASHRAE GUIDELINE XXP

Committee Draft

GPC 37 -Guidelines for the Application of Upper-Air (Upper Room) Ultraviolet Germicidal (UV-C) Devices to Control the Transmission of Airborne Pathogens

First Public Review (Month Year)
(Draft Shows Complete Proposed New Standard)

This draft has been recommended for public review by the responsible project committee. To submit a comment on this proposed standard, go to the ASHRAE website at www.ashrae.org/standards-research--technology/public-review-drafts and access the online comment database. The draft is subject to modification until it is approved for publication by the Board of Directors and ANSI. Until this time, the current edition of the standard (as modified by any published addenda on the ASHRAE website) remains in effect. The current edition of any standard may be purchased from the ASHRAE Online Store at www.ashrae.org/bookstore or by calling 404-636-8400 or 1-800-727-4723 (for orders in the U.S. or Canada).

The appearance of any technical data or editorial material in this public review document does not constitute endorsement, warranty, or guaranty by ASHRAE of any product, service, process, procedure, or design, and ASHRAE expressly disclaims such.

© 2013 ASHRAE. This draft is covered under ASHRAE copyright. Permission to reproduce or redistribute all or any part of this document must be obtained from the ASHRAE Manager of Standards, 1791 Tullie Circle, NE, Atlanta, GA 30329. Phone: 404-636-8400, Ext. 1125. Fax: 404-321-5478. E-mail: standards.section@ashrae.org.

ASHRAE, 1791 Tullie Circle, NE, Atlanta GA 30329-2305

- The purpose of this guideline is to provide information and recommendations for dosing, placement and safe usage of Upper-Air UV-C devices.

CIE TC 6-52

CIE GUIDE FOR THE MEASUREMENT OF UPPER AIR ULTRAVIOLET GERMICIDAL IRRADIATION LUMINARIES USING LOW PRESSURE GERMICIDAL [SHORT WAVELENGTH] UV-C LAMPS

The objective is to establish a standard procedure for the radiometric measurement of upper air ultraviolet germicidal irradiation luminaire, (luminaires) that use low-pressure mercury discharge lamps. Output will be a CIE/IES file format readable by CAD Lighting Program adapted for UV caculations.

Acknowledgements

- USAID and TB CARE II
- Edward A. Nardell, MD, Brigham and Women's Hospital, Partners in Health
- Paul A. Jensen, PhD, CDC
- Sonya Milonova, Research Fellow, Harvard School of Public Health
- Steve Rudnick, ScD, Harvard School of Public Health
- Wilhelm Leuschner, PhD, University of Pretoria
- Richard L. Vincent, MS, Icahn School of Medicine